EMTM-3001
10 Zone Remote Paging Console

The EMTM-3001 is the console unit, which can be connected to the EMIX EMZS-3310/A to form a flexible and multifunctional speaker zone selector system.

The EMTM-3001 allows the selection of 10 different speaker zones and has the usual all call and chime selection capability. It is also enhanced with override notification. In addition to that, the total number of speaker zones can be further extended through additional console unit like the EMIX EMTM-3002. The EMTM-3002 Paging Console Extension Unit is use as a slave unit to the EMTM-3001 Paging Console.

Features

- 10 Selectable Speaker Zones (Extendable)
- Override Indication
- Microphone Balanced Output
- Customizable Functionality
- Microphone Signal Support Up To <100m Distance

Model	EMTM-3001
Input Voltage	24VDC
Current Consumption	1A
Number of Zones	10 Zones
Audio Output (EMTM-3001)	Balanced Female XLR Socket, 0.6mV - 1.0V at 200ohms
Audio Input (EMTM-3001)	Balanced Female XLR Socket With 15 VDC Phantom Power, 0.6mV - 1.0V at 200ohms
Front Panel Control	EMTM 3001 - 13 Push Buttons (10 Zones, Chime, All Call and Mic-Press To Talk) EMTM 3002 Extension Unit - 10 Push Buttons For Zones
Front Panel Indicator	EMTM 3001 - 5mm LED Zone Indicator - 5mm LED Override EMTM 3002 Extension Unit - 5mm LED Zone Indicator
Dimension (W x H x D)	160 x 240 70 mm
Weight (Max)	1.2kg

Schematic Diagram

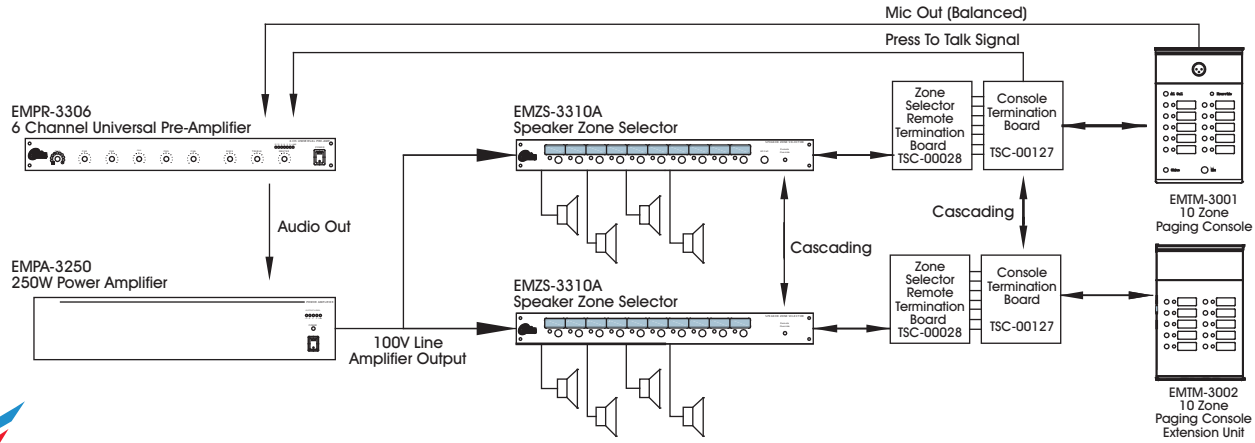

BUATAN
MALAYSIA

Specifications and design are subjected to change without notice for improvements.

MULTI ZONE PAGING